DENVER F3 - 620 mm

Decoflame's Denver Basic F3 bio-burner is available in four standard lengths. Developed and manufactured locally, it offers practical performance and straightforward integration in various fireplace applications. The Denver F3, engineered by Decoflame's in-house specialists, is a dependable automatic burner with clean design and intuitive operation. It is controlled via display or remote and comes standard with a customised external fuel pump. A simple, elegant solution for everyday use—ideal for both built-in models and drop-in installations.

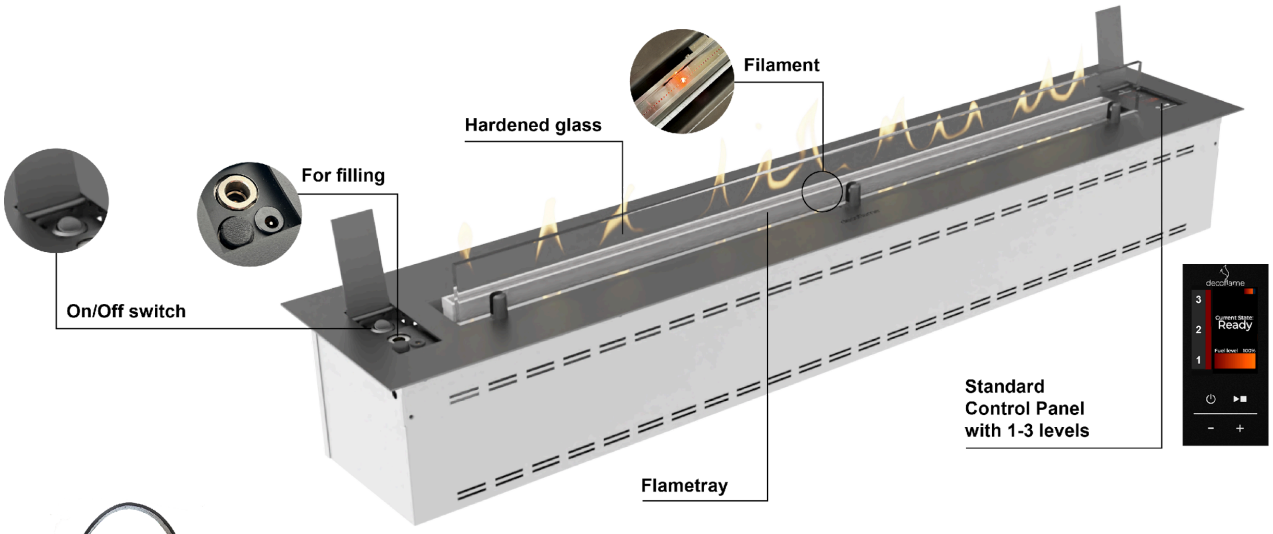

Remote control included

With Decoflame's remote control, operating the electronic fireplace is simplified - it's intuitive for a great user experience.

Fuel Pump included

Decoflame's automatic pump ensures easy and safe refilling of bioethanol, enhancing convenience and safety.

GENERAL INFORMATION

Model	Denver F3
Configuration	620 mm
Operation Type	Electronic
Production	Made in Denmark

DESIGN & MATERIALS

Material	Stainless steel / Powder coated aluminum
Finish	Standard black powder coating
Glass Quality	Tempered diamond clear glass
Standard Glass	1x Low Glass

BURNER SPECIFICATIONS

Fuel Type	Bioethanol 95 - 96.5 %
Flametray (mm)	400
Flame Levels	3
Power Supply	230 V AC (220 V compatible), 50–60 Hz, earthed connection
Operation Type	Electronic
Chimney	Not Required

PHYSICAL SPECIFICATIONS

Gross Dimensions (mm)	W: 620 × H: 160 × D: 215
Top Plate (mm)	L: 620 × D: 215 × T: 2
Base Housing (mm)	W: 600 × H: 158 × D: 190
Glass Dimensions (mm)	Low Glass: L: 400 × H: 80 × T: 6
Weight: (kg)	13.0

PERFORMANCE

Capacity (L)	3.8
Max Level Burn Time (H)	7.0
Nominal Heat Output (kW)	2.6
Fuel consumption (ml/h)	N/A

INSTALLATION REQUIREMENTS

Power Supply	230 V AC (220 V compatible), 50–60 Hz, earthed connection
Minimum Room Size (m^3)	51
Cut-out Dimensions (mm)	W: 605 × H: 200 × D: 400
Installation Environment	Indoor

FEATURES

Safety Features	Automatic emergency shut-off / Spill- and Safety censors
Add-on Features	N/A
Included Features	e-Ribbon Technology / Remote Control / External Fuel Pump with Quick Connection

DISCLAIMER – DECOFLAME A/S
All product specifications and technical data are subject to change without prior notice and are considered accurate as of the date of publication.Decoflame A/S, including its affiliates, employees, agents and other representatives (collectively referred to as “Decoflame A/S”), disclaims all liability for any errors, inaccuracies, or omissions in this document or in any other product-related information. Decoflame A/S shall not be held liable for any damage, loss, or indirect consequences arising from the use, installation, or operation of the products, unless otherwise required under applicable law. It is the user’s responsibility to ensure correct installation and usage in accordance with applicable safety standards and the manufacturer’s instructions. No licence, whether express or implied, to any intellectual property rights is granted through this document. Customers who use or sell Decoflame A/S products for purposes not explicitly specified do so at their own risk and agree to indemnify Decoflame A/S against any claims or damages resulting from such use. Fuel consumption may vary depending on individual units, environmental conditions, and operating parameters. Product images are for illustrative purposes only and may differ from the actual product. This limitation of liability does not apply where it would conflict with mandatory consumer protection laws.